Revolutionary High Speed Technology

Power, Precision and Reliability at 25,000 - 90,000 rpm to 1.60 hp

air turbine spindles®

+1.561.994.0500 • www.airturbinetools.com • info@airturbinetools.com

Are Your Machine Spindle Speeds Too Low?

Detail work taking hours?
Breaking too many tools?
Cutting speeds required to optimize smaller tools cannot be achieved using standard machine spindles.
If high speeds are required many machines are pushed to the limit and your machine is tied up for days.

What is the answer?
Utilize the compressed air at your machine.
Air Turbine Spindles® are powerful governed direct drives. Unlike speeders and coolant driven spindles, our spindles maintain speed when cutting, even corners and hard materials. That's a difference you will see immediately.

Want to save time and money?
Constant high speed on the tool path makes *Air Turbine Spindles®* ideal for precision micro machining, milling, slotting, drilling and profiling with small tools. You will dramatically increase cutting rates and reduce your cycle times.

Why are our spindles superior?
Air Turbine Spindles® generate low heat, low vibration and operate reliably with no duty cycle in 24/7 non-stop operations. That's because there are only two moving parts in these patented precision spindles – air cooled ceramic bearings and the turbine. There are no gears, high frequency brushes or vanes to burn out like in speeders or electric spindles. So you get no thermal expansion and great reliability while reducing wear on your main spindle.

Just connect compressed air, enter an M Code to mill at 400"/min (10,000 mm/min) with 2µ accuracy.

Patented Technology: Governed 25,000 - 90,000 rpm • Power to 1.60 hp (1.19 kW) • No Duty Cycle • No Thermal Expansion

COMPARISON OF CUTTING SPEED PER MINUTE WITH A 1.5 mm END MILL:

Standard Machine Spindle at 12,000 rpm = **2.22"/min (56.5 mm/min) advance**
Air Turbine Spindles® 625 Series at constant 50,000 rpm = **9.28"/min (235.6 mm/min) advance**

Your Cutting Speed is increased 4.2x with *Air Turbine Spindles®!*
In addition to reducing cycle time the accuracy of the cutting tool is improved and its life extended

$$V_c = \frac{D \times \pi \times n}{1000}$$

V_c = Cutting Speed
D = Tool Size
n = Spindle Speed Rating

Our Advantages at a Glance

Constant High Cutting Speed Reduces Cycle Times.

Longer Tool Life.
Faster Production.

Low Heat.
No Thermal Expansion.

Mill 24/7.
No Duty Cycle.

Direct Drive Reliability.
Only 2 Moving Parts.
No Maintenance.

Governor Control for Constant High Torque.
Maintains High Speed under Load.

Low Vibration.
Quiet - Under 67 dBA.

Environmentally Friendly (No Oil or Lubrication)

Improved Surface Quality.
No Secondary Finishing.

A SIMPLE EXAMPLE OF THE SAVINGS ACHIEVED WITH *AIR TURBINE SPINDLES®*:

Example: A standard machine spindle at 12,000 rpm produces 1 part in 75 minutes.

Production Run of 500 Pieces:
Machine Spindle: 500 pieces x 75 minutes = **625 hours**
Air Turbine Spindles® (50,000 rpm): 500 pieces x 10 minutes = **83.3 hours**

Result: Time saved = **541.7 hours**

© 2017 Air Turbine Tools, Inc. All Rights Reserved.

The Air Turbine Differences

Low Vibration, Quiet:

- < 0.4 mm/s^{2,} < 67 dBA.

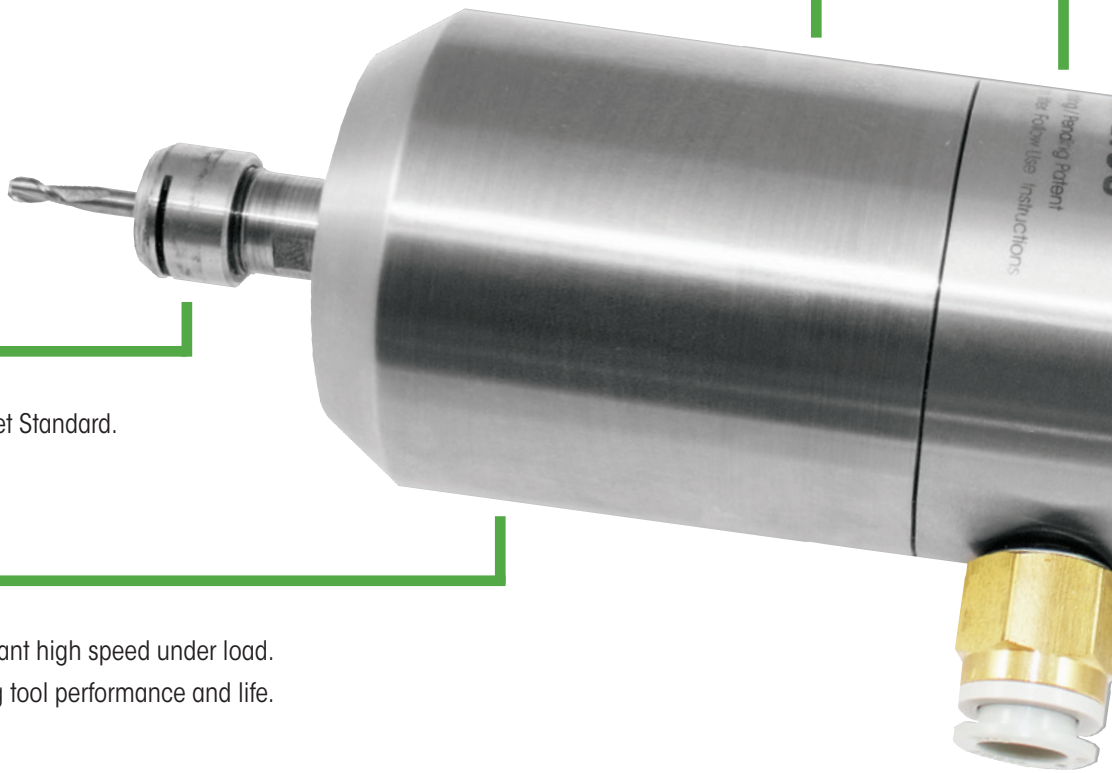

High Precision:

- 2 Micron Ultra Precision ER 8 or ER 11 Collet Standard.
- No thermal expansion.

Powerful Constant High Speed and Power:

- Patented governed turbine maintains constant high speed under load.
- Accelerate cycle times and optimize cutting tool performance and life.
- Eliminate secondary finishing.

Flexibility:

- Center rear air feed, patented stop block + collar (TMA), or manual side connection.

AUTOLOADING OPTIONS

Fully automate your spindle change with our Tool Changer Mounting Assembly (TMA)
Or connect rear air inlet to compressed air feed in your CNC spindle.

Auto loading reduces setup time and increases productivity.

Dry, clean 90 psi / 6.2 bar air only. Filter Extractor included as standard equipment.

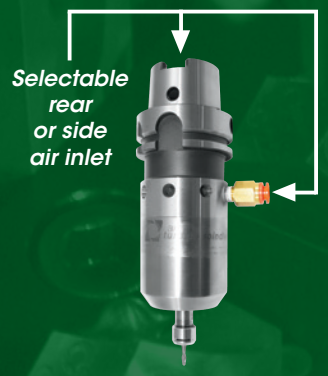

Reliable:

- Only two moving parts (Turbine and Bearings).
- Air cooled ceramic bearings.
- No Duty Cycle.

Patented Direct Drive Motor:

- Low friction and heat.
- No gears, high frequency brushes, or vanes to heat up or burn out.
- Long Service Life.

Shown: 625 CAT/DIN/BT

0.55 hp - Governed 65,000 rpm.

Customize Your Spindle:

- Available in all popular tool holder designs.
- Retrofit any CNC.

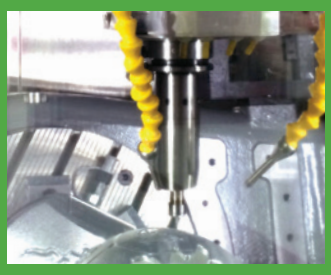

CENTER AIR FEED

(TMA) TOOLCHANGER MOUNTING ASSEMBLY

Automatically Tool Change on Demand!

© 2017 Air Turbine Tools, Inc. All Rights Reserved.

Application Examples

STEEL ROW MILLING ON DMG HSC 55

Linear Milling Depth: Row depth 2.0-0.13 RA
Material: 1.2344 Steel – HSC 30/70
Tool: Ball Nose End Mill R 2, 0.03mm/z

Standard DMG HSC 55 Spindle - **25,000 rpm**
Advance: 1,500 mm/min = Cycle Time: **60 minutes**

Air Turbine Spindles® 625HSK Spindle - **50,000 rpm**
Advance: 3,000 mm/min = Cycle Time: **30 minutes**

Cycle time halved with surface quality Ra 0.13.

BONDED CARBON FIBER ON HAAS VF6

Flying S, a successful manufacturer of aerospace components in Illinois, needed to cut carbon fiber bonded to hardened material at production speeds with an 1/16th or 0.625 end mill in a way that did not destroy the material.

Unable to make the part at the 7,500 rpm speed of the Haas VF6 machine spindle, Flying S installed the autoloading **650CAT40 with TMA**.

Flying S transformed its CNC into a high speed machine, milling in composites and hardened steel parts. Bur free surface quality and extended tool life combine with oil free operation, eliminating part contamination.

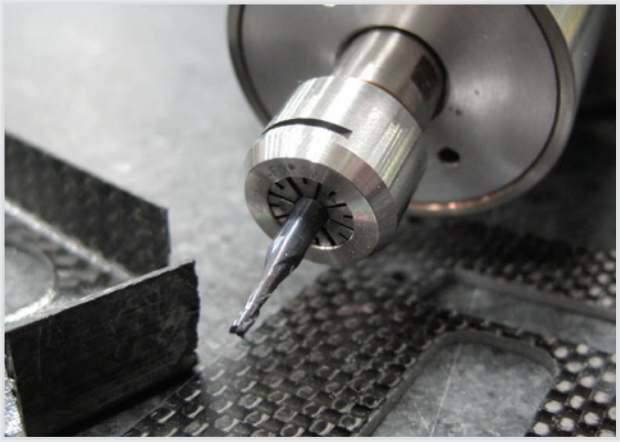

Spindle Selection Guide

All Air Turbine Spindles® are direct drives with our patented high torque governor maintaining high speed and torque under cutting load up to 80% of rated maximum power. This ensures continuous toolpath engagement at high speed in angles and hard materials for trochoidal milling and optimized cutting tool performance. X= Extra Power.

Optimum Spindle for Each Tool	
√ = Optimum	× = Not recommended for use
∞ = Acceptable	! = Dependent upon cutting conditions

		602(X)	625(X)	650(X)	660(X)
Drill	Ø 0.1 - 0.3mm	√	√	√	√
	Ø 0.3 - 0.5mm	∞	√	√	√
	Ø 0.5 - 1.0mm	!	√	√	√
	Ø 1.0 - 1.5mm	×	∞	√	√
	Ø 1.5 - 2.0mm	×	!	√	√
Endmill	Ø 0.1 - 1.0mm	√	√	√	√
	Ø 1.0 - 2.0mm	√	√	√	√
	Ø 2.0 - 3.5mm	!	√	√	√
	Ø 3.5 - 5.0mm	×	∞	√	√
	Ø 5.0 - 6.0mm	×	!	∞	∞
Jig Grinding		×	!	√	√

General Specifications	602(X)	625(X)	650(X)	660(X)
Speed (rpm)	40,000 50,000 65,000 90,000*	30,000 40,000 50,000 65,000	25,000 30,000 40,000	50,000
Power - hp	0.15 - 0.20	0.40 - 0.78	0.80 - 1.40	0.91 - 1.60
Collet Range	0.5mm - 3mm	0.5mm - 7mm	0.5mm - 7mm	0.5mm - 7mm
T.I.R. at Nose	Less than 2µm			
Air Pressure	6.2 Bar (0.62 MPa)			

**Due to its governed high speed and power the 602 90,000 rpm is for use only with micro end mills in special applications*

© 2017 Air Turbine Tools, Inc. All Rights Reserved.

625XDT Series

Increase production on your RoboDrill, Brother, Haas or other Drill Tap machine. The **625XDT** Series at **30,000, 40,000, 50,000 or 65,000 rpm**, up to **0.78 hp (0.58 kW)** is suitable for all applications. Governor control maintains constant high speed and power under load. Optimize milling, drilling, engraving, slotting and finishing with small tools.

Just fit the patented, double turbine **625XDT** Series spindles to your Drill Tap Machine magazine for automatic tool changing and increase production. No Duty Cycle and No Thermal Expansion.

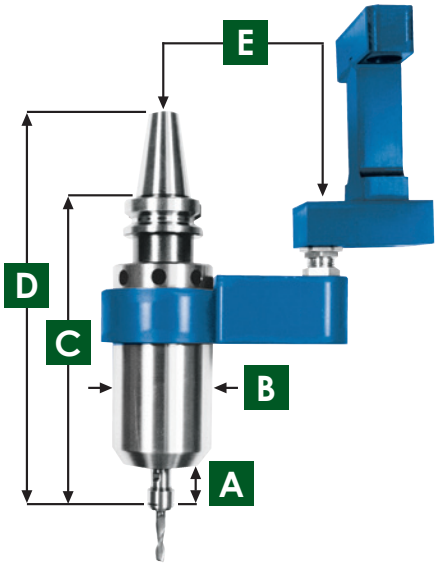

625XDT BT30 Shown

Dimensions

Many integrated shank dimensions (BT, CAT, DIN, ISO, HSK) available at www.airturbinetools.com

	BT30	DIN30
A	0.87" (22mm)	0.87" (22mm)
B	2.24" (57mm)	2.24" (57mm)
C	6.81" (173mm)	7.24" (184mm)
D	8.74" (222mm)	9.80" (249mm)
E	**RoboDrill**: 2.56" (65mm) • **Brother TC**: 3.58" (91mm) • **Haas DT**: 2.59" (66mm)	

General Specifications

Governed Speed rpm	30,000 / 40,000 / 50,000 / 65,000
Power Rating hp (kW)	0.72 (0.54) / 0.74 (0.55) / 0.76 (0.57) / 0.78 (0.58)
Inlet Air Pressure (clean dry air only)	90 PSI (6.2 Bar)
Air Consumption Idle cfm (l/s)	19 (8.97) / 20 (9.44) / 20 (9.44) / 20 (9.44)
Air Consumption Working Flow cfm (l/s)	22 (10.38) - 30 (14.16)
Sound Level	Less Than 67 dBA
Max Shank Capacity	**ER 11** - 1/4" (6mm)
Spindle Weight	96 oz (2.72 kg)
Coupling / Hose Min. Internal Diameter	8mm

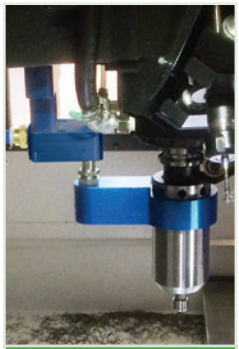

625XDT DIN30

Cutting Tool Guide

√ = Optimum

∞ = Acceptable

× = Not recommended for use

! = Dependent upon cutting conditions

Drill					
Diameter	0.1 - 0.3 mm	0.3 - 0.5 mm	0.5 - 1.0 mm	1.0 - 1.5 mm	1.5 - 2.0 mm
Rating	√	√	√	√	√
End Mill					
Diameter	0.1 - 1.0 mm	1.0 - 2.0 mm	2.0 - 3.5 mm	3.5 - 5.0 mm	5.0 - 6.0 mm
Rating	√	√	√	√	∞
Jig Grinding					
Rating	√				

Standard Equipment: 0.3 micron Combo Filter / Extractor, Spindle, 2 micron Ultra Precision ER 11 Collet System, Wrenches, Hose and Detachable Side NPT Fitting. Optional Collets 0.5 mm - 7 mm available.

602XDT Series

Increase milling and drilling feed rates, resulting in higher productivity with no duty cycle for true 24/7 unattended production on your RoboDrill, Brother, Haas or other Drill Tap machine – **40,000, 50,000 or 65,000 rpm**, up to **0.45 hp (0.34 kW)**.

With just 2 moving parts and low heat, the direct drive **602XDT** Series is a powerful, precise and reliable solution to reduce cycle times and increase tool life in 24/7 operation. No Thermal Expansion. Eliminate Secondary Finishing.

Dimensions

Many integrated shank dimensions (BT, CAT, DIN, ISO, HSK) available at www.airturbinetools.com

	BT30	DIN30
A	0.98" (25mm)	0.98" (25mm)
B	1.57" (40mm)	1.57" (40mm)
C	5.22" (130mm)	5.10" (130mm)
D	7.17" (182mm)	6.96" (177mm)
E	**RoboDrill**: 2.56" (65mm) • **Brother TC**: 3.58" (91mm) • **Haas DT**: 2.59" (66mm)	

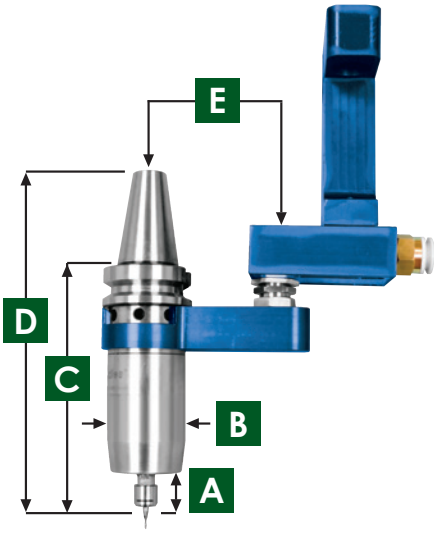

602XDT BT30 Shown

General Specifications

Governed Speed rpm	40,000 / 50,000 / 65,000
Power Rating hp (kW)	0.30 (0.22) / 0.40 (0.30) / 0.45 (0.34)
Inlet Air Pressure (clean dry air only)	90 PSI (6.2 Bar)
Air Consumption Idle cfm (l/s)	4 (1.9) / 5 (2.4) / 6 (2.8)
Air Consumption Working Flow cfm (l/s)	5 (2.36) - 12 (5.66)
Sound Level	Less Than 67 dBA
Max Shank Capacity	**ER 11** - 1/8" (3mm)
Spindle Weight	66 oz (1.88 kg)
Coupling / Hose Min. Internal Diameter	8mm

Cutting Tool Guide

√ = Optimum

∞ = Acceptable

× = Not recommended for use

! = Dependent upon cutting conditions

Drill					
Diameter	0.1 - 0.3 mm	0.3 - 0.5 mm	0.5 - 1.0 mm	1.0 - 1.5 mm	1.5 - 2.0 mm
Rating	√	∞	!	×	×
End Mill					
Diameter	0.1 - 1.0 mm	1.0 - 2.0 mm	2.0 - 3.5 mm	3.5 - 5.0 mm	5.0 - 6.0 mm
Rating	√	√	!	×	×
Jig Grinding					
Rating	×				

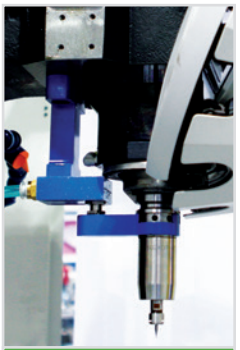

602XDT BT30

Standard Equipment: 0.3 micron Combo Filter / Extractor, Spindle, 2 micron Ultra Precision ER 11 Collet System, Wrenches, Hose and Detachable Side NPT Fitting. - Optional Collets 0.5 mm - 7 mm available.

© 2017 Air Turbine Tools, Inc. All Rights Reserved.

660X Series - *"The Titan - with Extra Power"*

Get nonstop power at **1.60 hp (1.19 kW)** with the double turbine and constant speed **50,000 rpm 660X Series**. Quadruple angular contact bearings, cooled by turbine air, make this spindle robust and reliable. Mill 24/7 with No Duty Cycle. Our turbines generate no heat - eliminating thermal effects on accuracy. Improve your surface quality at high speed and eliminate secondary finishing.

BT, CAT, DIN, HSK and JS Straight Shank (3/4" / 20mm). Selectable rear or side air feed.

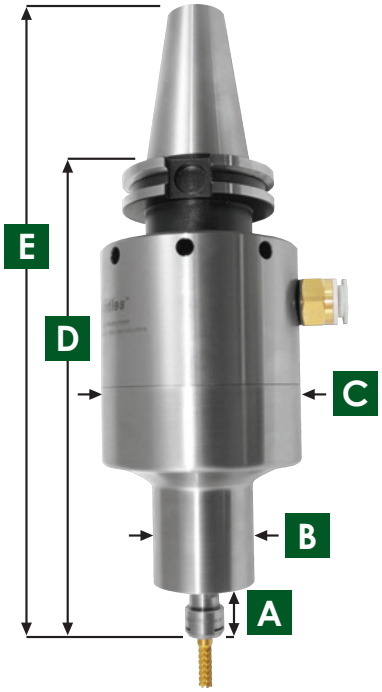

660XCAT40 Shown

Dimensions

Many integrated shank dimensions (BT, CAT, DIN, ISO, HSK) available at www.airturbinetools.com

	JS	HSK-A63	CAT40
A	0.87" (22mm)	0.87" (22mm)	0.87" (22mm)
B	1.63"(41mm)	1.63"(41mm)	1.63"(41mm)
C	3.23" (82mm)	3.23" (82mm)	3.23" (82mm)
D	6.26" (159mm)	8.23" (209mm)	7.68" (195mm)
E	8.23" (209mm)	9.13" (232mm)	10.40" (263mm)

General Specifications

Governed Speed rpm	50,000
Power Rating hp (kW)	1.60 (1.19)
Inlet Air Pressure (clean dry air only)	90 PSI (6.2 Bar)
Air Consumption Idle cfm (l/s)	18 (8.49)
Air Consumption Working Flow cfm (l/s)	19 (8.97) - 40 (18.89)
Sound Level	Less Than 67 dBA
Max Shank Capacity	**ER 11** - 1/4" (6mm)
Spindle Weight	**JS:** 75.2 oz (2.13 kg) • **CAT/DIN/BT/HSK:** 118.4 oz (3.34 kg)
Coupling / Hose Min. Internal Diameter	10mm

660CAT TMA

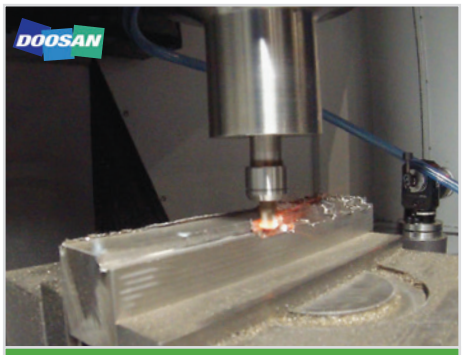

660CAT

660DIN TMA

Standard Equipment: 0.3 micron Combo Filter / Extractor, Spindle, 2 micron Ultra Precision ER 11 Collet System, Wrenches, Hose and Detachable Side NPT Fitting. Optional Collets 0.5 mm - 7 mm available.

660 Series - *"The Titan"*

The **660 Series** is ideal for heavier duty applications and milling hard materials in corners. The 660 features higher governed constant speed at **50,000 rpm** and even higher power at **0.94 hp (0.70 kW)**. The 660 mills faster in all materials, including tool steel, titanium and ceramics reducing cycle times dramatically. For long life milling in hard materials this robust 660 Series is equipped with quadruple air cooled angular contact bearings.

BT, CAT, DIN, HSK and JS Straight Shank (3/4" / 20mm). Selectable rear or side air feed.

Dimensions

Many integrated shank dimensions (BT, CAT, DIN, ISO, HSK) available at www.airturbinetools.com

	JS	HSK-A63	CAT40
A	0.87" (22mm)	0.87" (22mm)	0.87" (22mm)
B	1.63"(41mm)	1.63"(41mm)	1.63"(41mm)
C	3.23"(82mm)	3.23" (82mm)	3.23" (82mm)
D	5.79" (147mm)	7.76" (197mm)	7.20" (183mm)
E	7.76" (197mm)	8.66" (220mm)	9.88" (251mm)

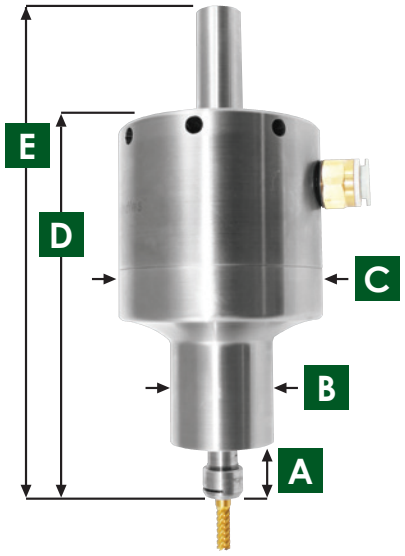

660JS Shown

General Specifications

Governed Speed rpm	50,000
Power Rating hp (kW)	0.94 (0.70)
Inlet Air Pressure (clean dry air only)	90 PSI (6.2 Bar)
Air Consumption Idle cfm (l/s)	14 (6.61)
Air Consumption Working Flow cfm (l/s)	14 (6.60) - 35 (16.5)
Sound Level	Less Than 67 dBA
Max Shank Capacity	**ER 11** - 1/4" (6mm)
Spindle Weight	**JS:** 65.8 oz (1.95 kg) • **CAT/DIN/BT/HSK:** 112.8 oz (3.20 kg)
Coupling / Hose Min. Internal Diameter	8mm

660(X) Cutting Tool Guide

√ = Optimum

∞ = Acceptable

× = Not recommended for use

! = Dependent upon cutting conditions

Drill					
Diameter	0.1 - 0.3 mm	0.3 - 0.5 mm	0.5 - 1.0 mm	1.0 - 1.5 mm	1.5 - 2.0 mm
Rating	√	√	√	√	√
End Mill					
Diameter	0.1 - 1.0 mm	1.0 - 2.0 mm	2.0 - 3.5 mm	3.5 - 5.0 mm	5.0 - 6.0 mm
Rating	√	√	√	√	∞
Jig Grinding					
Rating	√				

660JS

Standard Equipment: 0.3 micron Combo Filter / Extractor, Spindle, 2 micron Ultra Precision ER 11 Collet System, Wrenches, Hose and Detachable Side NPT Fitting. Optional Collets 0.5 mm - 7 mm available.

© 2017 Air Turbine Tools, Inc. All Rights Reserved.

650X Series - *"The Workhorse - with Extra Power"*

Get nonstop power and precision with the double turbine **650X Series** - **25,000 to 40,000 rpm, < 1.40 hp (1.04 kW)**. The patented governor controlled high power **650X Series** maintains constant high speed for trochoidal milling in hard materials and cuts your cycle times dramatically. Double front ceramic bearings, cooled by turbine air, make this spindle robust and reliable. Mill 24/7 with No Duty Cycle and No Thermal Expansion. Eliminates secondary finishing.

BT, CAT, DIN, HSK and JS Straight Shank (3/4" / 20mm). Selectable rear or side air feed.

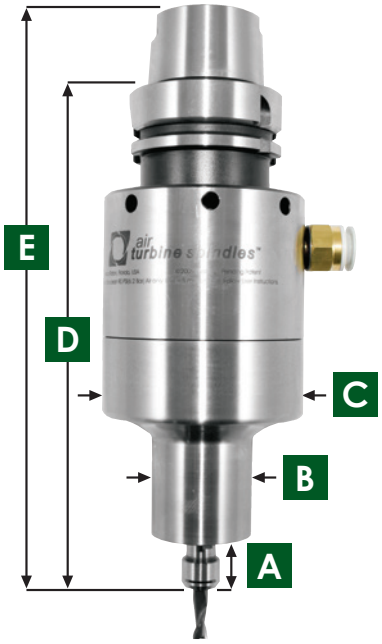

650XHSK-A63 Shown

Dimensions

Many integrated shank dimensions (BT, CAT, DIN, ISO, HSK) available at www.airturbinetools.com

	JS	HSK-A63	CAT40
A	0.87" (22mm)	0.87" (22mm)	0.87" (22mm)
B	1.63"(41mm)	1.63"(41mm)	1.63"(41mm)
C	3.23" (82mm)	3.23" (82mm)	3.23" (82mm)
D	6.26" (159mm)	8.23" (209mm)	7.68" (195mm)
E	8.23" (209mm)	9.13" (232mm)	10.40" (263mm)

General Specifications

Governed Speed rpm	25,000 / 30,000 / 40,000
Power Rating hp (kW)	1.2 (0.90) / 1.3 (0.98) / 1.4 (1.04)
Inlet Air Pressure (clean dry air only)	90 PSI (6.2 Bar)
Air Consumption Idle cfm (l/s)	16 (7.56) / 17 (8.02) / 18 (8.49)
Air Consumption Working Flow cfm (l/s)	19 (8.97) - 40 (18.89)
Sound Level	Less Than 67 dBA
Max Shank Capacity	**ER 11** - 1/4" (6mm)
Spindle Weight	**JS:** 75.2 oz (2.13 kg) • **CAT/DIN/BT/HSK:** 118.4 oz (3.34 kg)
Coupling / Hose Min. Internal Diameter	10mm

650CAT TMA

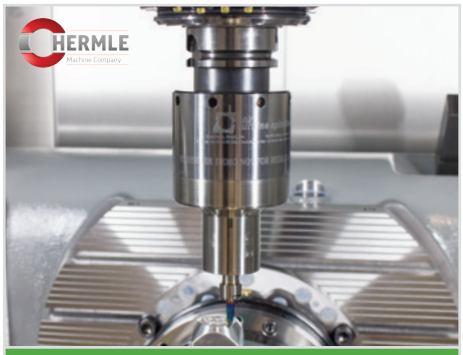

650HSK

650DIN TMA

Standard Equipment: 0.3 micron Combo Filter / Extractor, Spindle, 2 micron Ultra Precision ER 11 Collet System, Wrenches, Hose and Detachable Side NPT Fitting. Optional Collets 0.5 mm - 7 mm available.

650 Series - *"The Workhorse"*

The **650 Series** delivers governed constant high speeds under load - **25,000 to 40,000 rpm, < 0.88 hp (0.66 kW)**. Robust and reliable, with double front ceramic bearings, the **650 Series** is ideal for heavier duty applications and milling hard materials in corners. The governor controlled turbine maintains rated high speed, optimizing tool performance and life. Effective in all materials, including tool steel, titanium and ceramic. Ultra low vibration and no heat in 24/7 operation.

BT, CAT, DIN, HSK and JS Straight Shank (3/4" / 20mm). Selectable rear or side air feed.

Dimensions

Many integrated shank dimensions (BT, CAT, DIN, ISO, HSK) available at www.airturbinetools.com

	JS	HSK-A63	CAT40
A	0.87" (22mm)	0.87" (22mm)	0.87" (22mm)
B	1.63"(41mm)	1.63"(41mm)	1.63"(41mm)
C	3.23"(82mm)	3.23" (82mm)	3.23" (82mm)
D	5.79" (147mm)	7.76" (197mm)	7.20" (183mm)
E	7.76" (197mm)	8.66" (220mm)	9.88" (251mm)

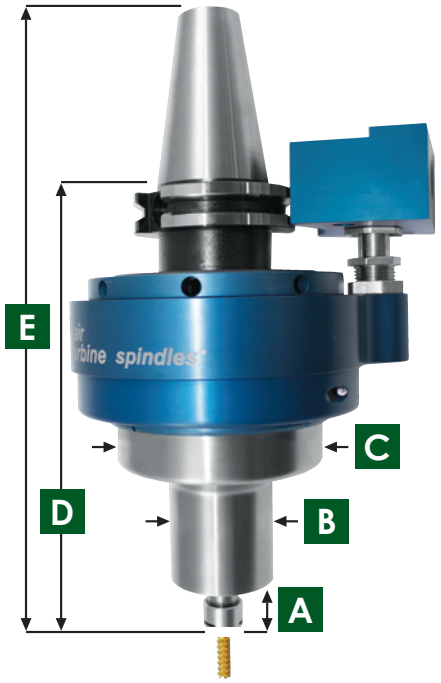

650CAT40 Shown

General Specifications

Governed Speed rpm	25,000 / 30,000 / 40,000
Power Rating hp (kW)	0.80 (0.60) / 0.83 (0.62) / 0.88 (0.66)
Inlet Air Pressure (clean dry air only)	90 PSI (6.2 Bar)
Air Consumption Idle cfm (l/s)	13 (6.1) / 14 (6.6) / 14 (6.6)
Air Consumption Working Flow cfm (l/s)	14 (6.60) - 35 (16.5)
Sound Level	Less Than 67 dBA
Max Shank Capacity	**ER 11** - 1/4" (6mm)
Spindle Weight	**JS:** 65.8 oz (1.95 kg) • **CAT/DIN/BT/HSK:** 112.8 oz (3.20 kg)
Coupling / Hose Min. Internal Diameter	8mm

650(X) Cutting Tool Guide

√ = Optimum

∞ = Acceptable

× = Not recommended for use

! = Dependent upon cutting conditions

Drill					
Diameter	0.1 - 0.3 mm	0.3 - 0.5 mm	0.5 - 1.0 mm	1.0 - 1.5 mm	1.5 - 2.0 mm
Rating	√	√	√	√	√
End Mill					
Diameter	0.1 - 1.0 mm	1.0 - 2.0 mm	2.0 - 3.5 mm	3.5 - 5.0 mm	5.0 - 6.0 mm
Rating	√	√	√	√	∞
Jig Grinding					
Rating	√				

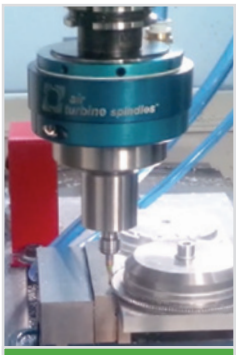

650CATTMA

Standard Equipment: 0.3 micron Combo Filter / Extractor, Spindle, 2 micron Ultra Precision ER 11 Collet System, Wrenches, Hose and Detachable Side NPT Fitting. Optional Collets 0.5 mm - 7 mm available.

© 2017 Air Turbine Tools, Inc. All Rights Reserved.

625X Series - *"The All-Rounder - with Extra Power"*

The patented double turbine **625X Series** delivers constant high speeds under load - **30,000 to 65,000 rpm, < 0.78 hp (0.58 kW)**. Speed up your cycle times with this compact and powerful spindle. Ideal for contouring, mold making, milling, finishing and drilling with small tools. Governor control maintains constant high speed and power under load. For heavier applications consider the **650 Series** with high torque and double front bearings.

BT, CAT, DIN, HSK and JS Straight Shank (3/4" / 20mm). Selectable rear or side air feed.

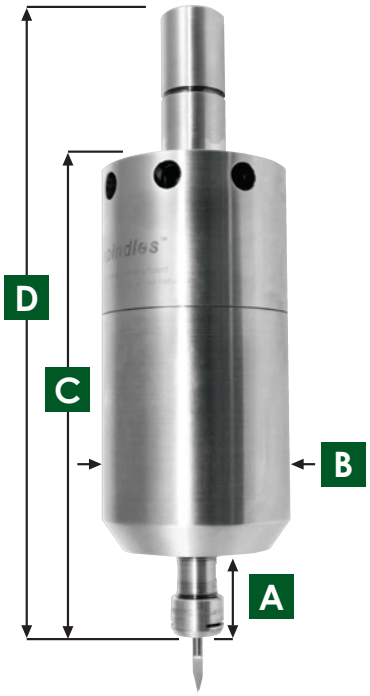

625XJS Shown

Dimensions
Many integrated shank dimensions (BT, CAT, DIN, ISO, HSK) available at www.airturbinetools.com

	JS	HSK-A63	CAT40
A	0.87" (22mm)	0.87" (22mm)	0.87" (22mm)
B	2.24" (57mm)	2.24" (57mm)	2.24" (57mm)
C	5.55" (141mm)	6.50" (165mm)	6.85" (174mm)
D	7.52" (191mm)	7.56" (192mm)	9.57" (243mm)

General Specifications

Governed Speed rpm	30,000 / 40,000 / 50,000 / 65,000
Power Rating hp (kW)	0.72 (0.54) / 0.74 (0.55) / 0.76 (0.57) / 0.78 (0.58)
Inlet Air Pressure (clean dry air only)	90 PSI (6.2 Bar)
Air Consumption Idle cfm (l/s)	19 (8.97) / 20 (9.44) / 20 (9.44) / 20 (9.44)
Air Consumption Working Flow cfm (l/s)	22 (10.38) - 30 (14.16)
Sound Level	Less Than 67 dBA
Max Shank Capacity	**ER 11** - 1/4" (6mm)
Spindle Weight	**JS:** 64 oz (1.81 kg) • **CAT/DIN/BT/HSK:** 96 oz (2.72 kg)
Coupling / Hose Min. Internal Diameter	8mm

625DIN TMA

625HSK

625XCAT

Standard Equipment: 0.3 micron Combo Filter / Extractor, Spindle, 2 micron Ultra Precision ER 11 Collet System, Wrenches, Hose and Detachable Side NPT Fitting. Optional Collets 0.5 mm - 7 mm available.

625 Series - *"The All-Rounder"*

The versatile and reliable **625 Series** delivers governed constant high speeds under load - **30,000 to 65,000 rpm, < 0.55 hp (0.41 kW)**. Speed up your cycle times and reduce tool breakage with the compact **625 Series**. Ideal for mold making, milling and finishing with small tools up to 1/4" / 6mm capacity. Only 2 moving parts and air circulation over the bearings, result in low heat. Get the reliability of direct drive milling with no duty cycle and no thermal expansion.

BT, CAT, DIN, HSK and JS Straight Shank (3/4" / 20mm). Selectable rear or side air feed.

Dimensions

Many integrated shank dimensions (BT, CAT, DIN, ISO, HSK) available at www.airturbinetools.com

	JS	HSK-A63	CAT40
A	0.87" (22mm)	0.87" (22mm)	0.87" (22mm)
B	2.24" (57mm)	2.24" (57mm)	2.24" (57mm)
C	5.12" (130mm)	6.06" (154mm)	6.42" (163mm)
D	7.09" (180mm)	7.13" (181mm)	9.13" (232mm)

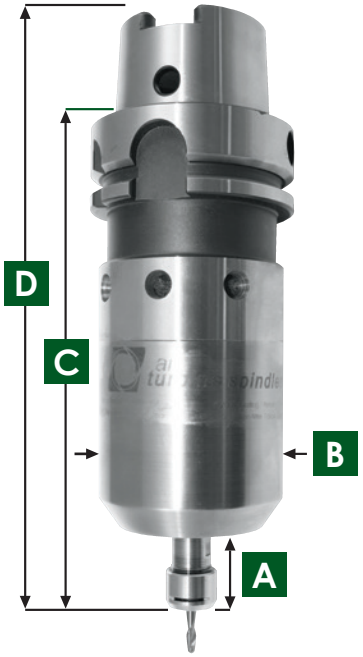

625HSK-A63 Shown

General Specifications

Governed Speed rpm	30,000 / 40,000 / 50,000 / 65,000
Power Rating hp (kW)	0.40 (0.30) / 0.45 (0.34) / 0.50 (0.37) / 0.55 (0.41)
Inlet Air Pressure (clean dry air only)	90 PSI (6.2 Bar)
Air Consumption Idle cfm (l/s)	10.5 (4.9) / 11 (5.2) / 11 (5.2) / 11 (5.2)
Air Consumption Working Flow cfm (l/s)	11 (5.2) - 20 (9.4)
Sound Level	Less Than 67 dBA
Max Shank Capacity	**ER 11** - 1/4" (6mm)
Spindle Weight	**JS:** 49.6 oz (1.41 kg) • **CAT/DIN/BT/HSK:** 81.6 oz (2.31 kg)
Coupling / Hose Min. Internal Diameter	6.5mm

625(X) Cutting Tool Guide

√ = Optimum

∞ = Acceptable

× = Not recommended for use

! = Dependent upon cutting conditions

Drill					
Diameter	0.1 - 0.3 mm	0.3 - 0.5 mm	0.5 - 1.0 mm	1.0 - 1.5 mm	1.5 - 2.0 mm
Rating	√	√	√	∞	!
End Mill					
Diameter	0.1 - 1.0 mm	1.0 - 2.0 mm	2.0 - 3.5 mm	3.5 - 5.0 mm	5.0 - 6.0 mm
Rating	√	√	√	∞	!
Jig Grinding					
Rating	!				

625CAT TMA

Standard Equipment: 0.3 micron Combo Filter / Extractor, Spindle, 2 micron Ultra Precision ER 11 Collet System, Wrenches, Hose and Detachable Side NPT Fitting. Optional Collets 0.5 mm - 7 mm available.

© 2017 Air Turbine Tools, Inc. All Rights Reserved.

602 Series - *"The Sprinter"*

The **602 Series** maintains governed constant high speeds under load - **40,000 to 90,000 rpm, < 0.20 hp (0.15 kW)**. This compact, direct drive spindle is engineered for high speed micro machining, ideal for engraving, milling, drilling and finishing with micro tools. Only 2 moving parts and air circulation over the bearings result in low heat and great reliability.

BT, CAT, DIN, HSK and JS Straight Shank (3/4" / 20mm). Selectable rear or side air feed.

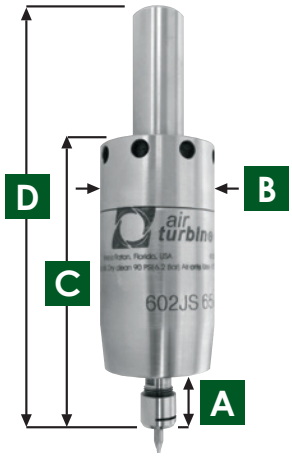

602JS Shown

Dimensions

Many integrated shank dimensions (BT, CAT, DIN, ISO, HSK) available at www.airturbinetools.com

	JS	HSK-A63	CAT40
A	0.75" (19mm)	0.75" (19mm)	0.75" (19mm)
B	1.57" (40mm)	1.57" (40mm)	1.57" (40mm)
C	3.75" (95mm)	5.55" (141mm)	6.06" (154mm)
D	5.75" (146mm)	6.69" (170mm)	8.74" (222mm)

General Specifications

Governed Speed rpm	40,000 / 50,000 / 65,000 / *90,0000
Power Rating hp (kW)	0.15 (0.11) / 0.2 (0.15) / 0.2 (0.15) / 0.2 (0.15)
Inlet Air Pressure (clean dry air only)	90 PSI (6.2 Bar)
Air Consumption Idle cfm (l/s)	4.5 (2.1) / 4.5 (2.1) / 4.5 (2.1) / 5 (2.4)
Air Consumption Working Flow cfm (l/s)	5 (2.36) - 6 (3.30)
Sound Level	Less Than 67 dBA
Max Shank Capacity	**ER 8** - 1/8" (3mm)
Spindle Weight	**JS:** 23.2 oz (0.66 kg) • **CAT/DIN/BT/HSK:** 46.4 oz (1.32 kg)
Coupling / Hose Min. Internal Diameter	6.5mm

**Due to its governed high speed and power the 602 90,000 rpm is only for use with micro end mills in special applications*

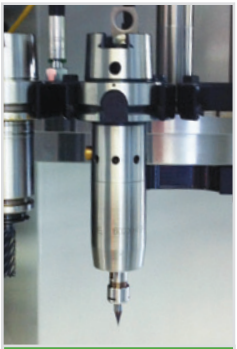

602HSK

602 Cutting Tool Guide

√ = Optimum

∞ = Acceptable

× = Not recommended for use

! = Dependent upon cutting conditions

Drill					
Diameter	0.1 - 0.3 mm	0.3 - 0.5 mm	0.5 - 1.0 mm	1.0 - 1.5 mm	1.5 - 2.0 mm
Rating	√	∞	!	×	×
End Mill					
Diameter	0.1 - 1.0 mm	1.0 - 2.0 mm	2.0 - 3.5 mm	3.5 - 5.0 mm	5.0 - 6.0 mm
Rating	√	√	!	×	×
Jig Grinding					
Rating	×				

Standard Equipment: 0.3 micron Combo Filter / Extractor, Spindle, 2 micron Ultra Precision ER 8 Collet System, Wrenches, Hose and Detachable Side NPT Fitting. Optional Collets 0.5 mm - 7 mm available.

650L Series - *"The Body Builder"*

The robust, long body **650L (100mm) Series** delivers governed constant high speed and power under load - **25,000 to 40,000 rpm, < 0.88 hp (0.66 kW)** with double front ceramic bearings. The **650L (100mm) Series** is ideal for heavier duty applications and milling hard materials in corners in deep pockets.

BT, CAT, DIN, HSK and JS Straight Shank (3/4" / 20mm).
Selectable rear or side air feed. See specifications on page 11.

Dimensions
Many integrated shank dimensions (BT, CAT, DIN, ISO, HSK) available at www.airturbinetools.com

	JS	HSK-A63	CAT40
A	0.99" (25mm)	0.99" (25mm)	0.99" (25mm)
B	1.62" (41mm)	1.62" (41mm)	1.62" (41mm)
C	3.23" (82mm)	3.23" (82mm)	3.23" (82mm)
D	5.59" (142mm)	5.59" (142mm)	5.59" (142mm)
E	8.22" (209mm)	9.99" (254mm)	9.59" (244mm)
F	10.24" (260mm)	11.14" (283mm)	12.34" (313mm)

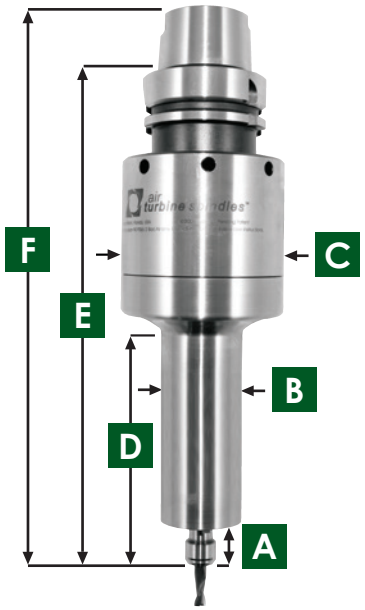

650LHSK-A63 (100mm length) Shown

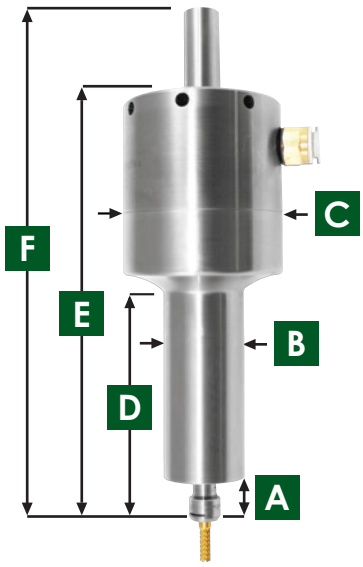

650XLJS (100mm length) Shown

The robust, long body **650XL (100mm) Series** delivers governed constant high speed and power under load - **25,000 to 40,000 rpm, < 1.40 hp (1.04 kW)** with double front ceramic bearings for heavier duty applications. The governor controlled high power **650XL (100mm) Series** maintains constant high speed for trochoidal milling in hard materials in deep pockets.

BT, CAT, DIN, HSK and JS Straight Shank (3/4" / 20mm).
Selectable rear or side air feed. See specifications on page 12.

Dimensions
Many integrated shank dimensions (BT, CAT, DIN, ISO, HSK) available at www.airturbinetools.com

	JS	HSK-A63	CAT40
A	0.99" (25mm)	0.99" (25mm)	0.99" (25mm)
B	1.62" (41mm)	1.62" (41mm)	1.62" (41mm)
C	3.23" (82mm)	3.23" (82mm)	3.23" (82mm)
D	5.59" (142mm)	5.59" (142mm)	5.59" (142mm)
E	8.72" (221mm)	10.49" (266mm)	10.09" (256mm)
F	10.74" (273mm)	11.64" (296mm)	12.84" (326mm)

Standard Equipment: 0.3 micron Combo Filter / Extractor, Spindle, 2 micron Ultra Precision ER 11 Collet System, Wrenches, Hose and Detachable Side NPT Fitting. Optional Collets 0.5 mm - 7 mm available.

© 2017 Air Turbine Tools, Inc. All Rights Reserved.

625L Series - *"The Super Model"*

The **625L (50mm) Series** delivers governed constant high speeds under load - **30,000 to 65,000 rpm, < 0.55 hp (0.41 kW)**. This reliable multipurpose spindle, with its 50mm length body, is ideal for mold making, milling and finishing with small cutter capacities in deep pockets. See specifications on page 14.

BT, CAT, DIN, HSK and JS Straight Shank (3/4" / 20mm).
Selectable rear or side airfeed. Double front bearings standard.

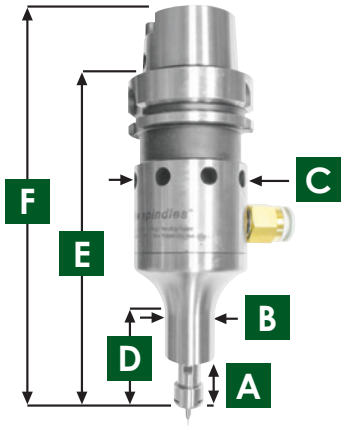

625LHSK-A63 (50mm length) Shown

Dimensions
Many integrated shank dimensions
(BT, CAT, DIN, ISO, HSK) available at www.airturbinetools.com

	JS	HSK-A63	CAT40
A	1.00" (25mm)	1.00" (25mm)	1.00" (25mm)
B	1.00" (25mm)	1.00" (25mm)	1.00" (25mm)
C	2.25" (57mm)	2.25" (57mm)	2.25" (57mm)
D	2.16" (55mm)	2.16" (55mm)	2.16" (55mm)
E	5.22" (133mm)	6.97" (177mm)	6.65" (169mm)
F	7.22" (183mm)	8.03" (204mm)	9.36" (238mm)

625LHSK (50mm)

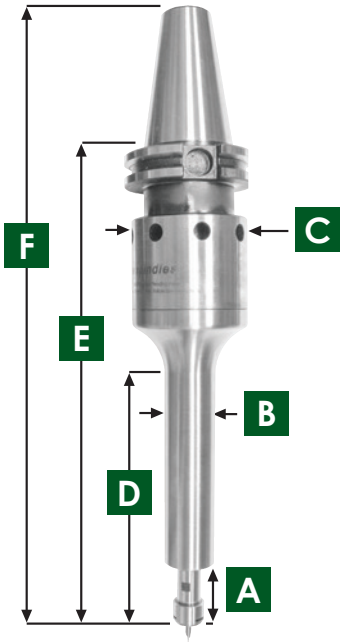

625LCAT40 (100mm length) Shown

The long body **625L (100mm) Series** delivers governed constant high speeds under load - **30,000 to 65,000 rpm, < 0.55 hp (0.41 kW)**. Speed up your cycle times with this compact and powerful spindle. Ideal for contouring, mold making, milling, finishing and drilling with small tools in deep pockets. Governor control maintains constant high speed and power under load.

BT, CAT, DIN, HSK and JS Straight Shank (3/4" / 20mm).
Selectable rear or side airfeed. Double front bearings standard.

Dimensions
Many integrated shank dimensions
(BT, CAT, DIN, ISO, HSK) available at www.airturbinetools.com

	JS	HSK-A63	CAT40
A	1.00" (25mm)	1.00" (25mm)	1.00" (25mm)
B	1.00" (25mm)	1.00" (25mm)	1.00" (25mm)
C	2.25" (57mm)	2.25" (57mm)	2.25" (57mm)
D	4.80" (122mm)	4.80" (122mm)	4.80" (122mm)
E	7.86" (200mm)	9.61" (244mm)	9.29" (236mm)
F	9.86" (250mm)	10.67" (271mm)	12" (305mm)

625LCAT (100mm)

Standard Equipment: 0.3 micron Combo Filter / Extractor, Spindle, 2 micron Ultra Precision ER 11 Collet System, Wrenches, Hose and Detachable Side NPT Fitting. Optional Collets 0.5 mm - 7 mm available.

Hose / Fitting / Connector Specifications

Minimum 90 psi (6.2 bar) air pressure (Okay to adjust up to 100 psi (7 bar) at regulator in line to Air Turbine Tools®, as psi / bar air pressure will drop under idle/working load). Do not exceed 100 psi (7 bar).

Hose / Fitting / Connector Internal Diameter Specifications	
Models	**Minimum Internal Diameter**
601, 602, 602X and 625 spindles	6.5mm
625X, 650, 660 spindles and (602, 602X, 625, 625X, 650 and 660 spindles with TMA)	8mm
650X, 660X spindles and (650X and 660X spindles with TMA)	10mm

General Air Fitting Dimensions

Quick Disconnect type fittings (shop air type):

- 1/4" Male > ID = Usually 0.210" but some variations occur.
- 1/4" Male (High Flow, Harbor) ID = 0.277" with 1/4" NPT male thread
- 3/8" Male hole = 0.283" - 0.285" with thread of 3/8" - NPT (ID of female mating OD appears even smaller ID).
- 1/2" Male hole = 0.375" (0.655" OD)

Hose Notes: Actual Internal Diameter on brass fittings (i.e. swedged on ends) of standard Goodyear, etc. brands of 1/2" & 3/8" hose have various internal dimensions. (Example = Goodyear 1/2" Red hose with 3/8" / 9.5mm NPT fitting has Internal diameter hole of 0.282", which is sufficient for 601, 602, 602X and 625 units but undersized for 625X, 650, 650X and 660X units.

Goodyear black 3/8" / 9.5mm hose has Internal Diameter hole on swedged fittings of ~0.265" are suitable for 601, 602, 602X and 625 units.

Compressor Tip: Typical CFM (L/s) compressor > over 10 hp, each additional hp (kW) of motor capacity will generate about 4 CFM (1.9 L/s) of compressed air at 90 psi (6.2 bar).

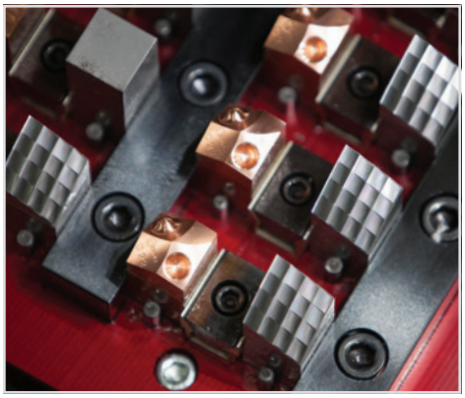

© 2017 Air Turbine Tools, Inc. All Rights Reserved.

air turbine spindles®

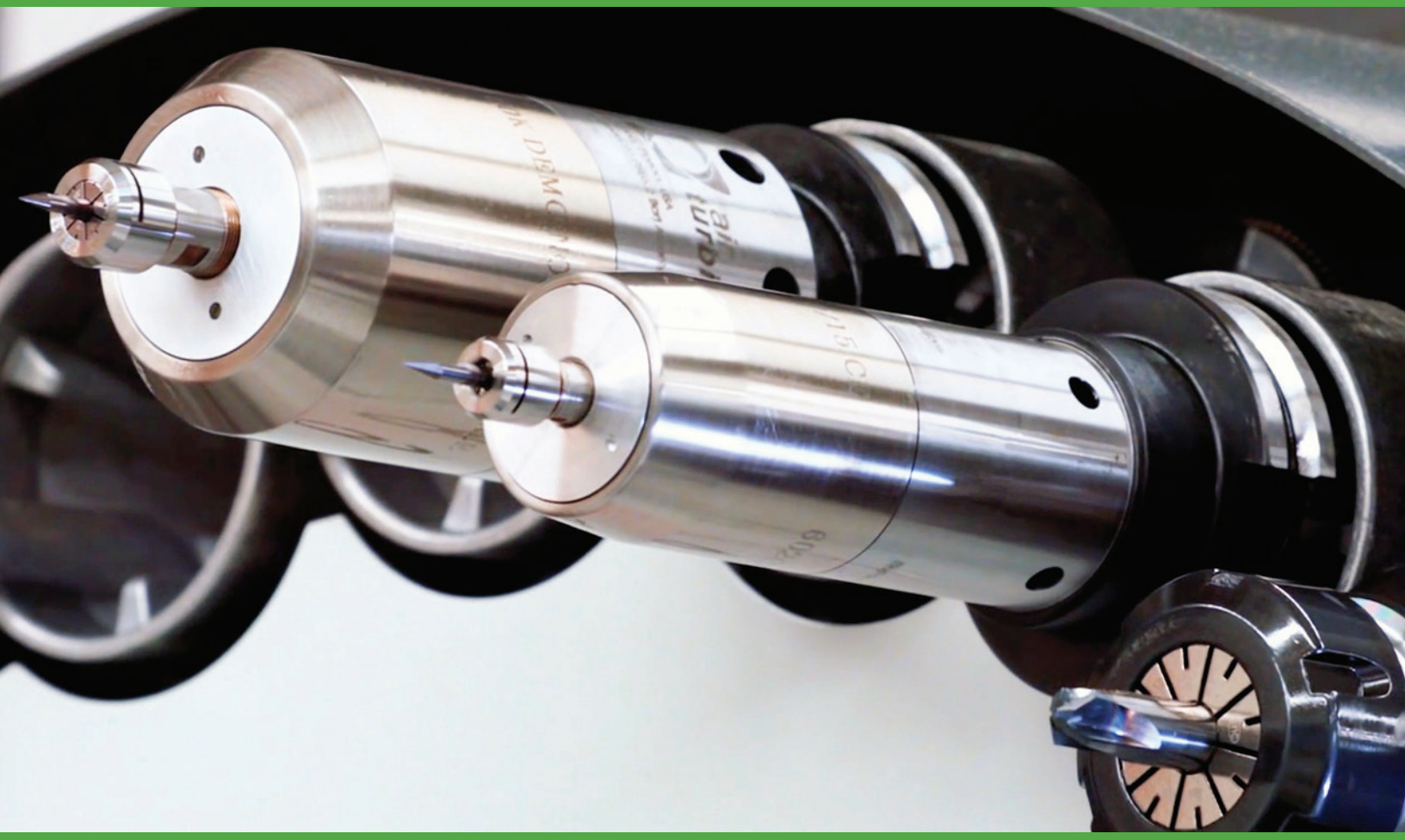

Abrasive Specialties 4201 Airport Road Cincinnati, OH 45226
513-271-3883 / 513-271-3882 fax
www.grithappens.com / info@grithappens.com

Made in USA

1225 Broken Sound Parkway, NW, Suite. D • Boca Raton, Florida 33487, USA
Phone: +1.561.994.0500 • Fax: +1.561.994.8097 • info@airturbinetools.com • www.airturbinetools.com

Do not use couplings / hoses less than 1/4" / 6mm Internal Diameter (ID). Use couplings / hoses with a minimum ID of 6.5mm for 602, 602X and 625 spindles, a minimum ID of 8mm for 625X, 650, 660 spindles and (602, 602X, 625, 625X, 650 and 660 spindles with TMA) and a minimum ID of 10mm for 650X, 660X spindles and (650X and 660X spindles with TMA). Always use a 0.3 micron filter and/or extractor where required and check specified psi or l/s air flow. Use 90 psi / 6.2 Bar clean, dry, oil-free air only. Use eye protection and follow safety instructions. Supply is subject to Air Turbine Tools Inc, terms and conditions of sale and distributor policies in effect for the time being. Subject to availability, change of specifications, price and terms without notice. All specifications approximate.

Air Turbine Spindles® is the registered trade name of Air Turbine Tools, Inc. © 2017 Air Turbine Tools, Inc. All rights reserved.